Octal D Flip-Flop with Common Clock and Reset

High−Performance Silicon−Gate CMOS

MC74HC273A, MC74HCT273A

The MC74HC273A/MC74HCT273A is identical in pinout to the LS273. The MC74HC273A inputs are compatible with Standard CMOS outputs; with pull−up resistors, the device is compatible with LSTTL outputs. The MC74HCT273A may be used as a level converter for interfacing TTL or NMOS outputs to high speed CMOS inputs.

The HC273A/HCT273A consists of eight D flip−flops with common Clock and Reset inputs. Each flip−flop is loaded with a low−to−high transition of the Clock input. Reset is asynchronous and active low.

Features

- Output Drive Capability: 10 LSTTL Loads
- Outputs Directly Interface to CMOS, NMOS and TTL
- Operating Voltage Range: 2.0 to 6.0 V (HC), 4.5 to 5.5 V (HCT)
- Low Input Current: 1.0 μA
- High Noise Immunity Characteristic of CMOS Devices
- In Compliance with the Requirements Defined by JEDEC Standard No. 7 A
- Chip Complexity: 284 FETs or 71 Equivalent Gates
- −Q Suffix for Automotive and Other Applications Requiring Unique Site and Control Change Requirements; AEC−Q100 Qualified and PPAP Capable
- These Devices are Pb−Free, Halogen Free and are RoHS Compliant

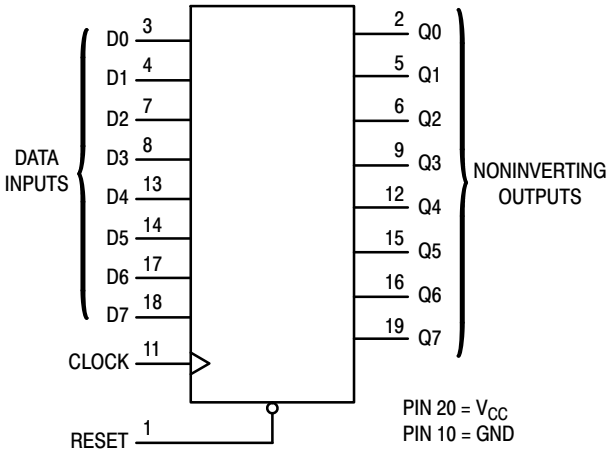

Figure 1. Logic Diagram

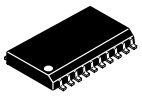

SOIC−20
DW SUFFIX
CASE 751D

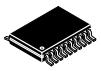

TSSOP−20
DT SUFFIX
CASE 948E

PIN ASSIGNMENT

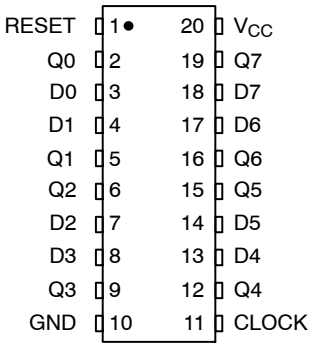

MARKING DIAGRAMS

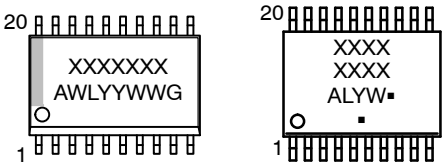

SOIC−20 **TSSOP−20**

XXXXXXXX	= Specific Device Code
A	= Assembly Location
WL, L	= Wafer Lot
YY, Y	= Year
WW, W	= Work Week
G or ▪	= Pb−Free Package

(Note: Microdot may be in either location)

FUNCTION TABLE

Inputs			Output
Reset	Clock	D	Q
L	X	X	L
H	↗	H	H
H	↗	L	L
H	L	X	No Change
H	↘	X	No Change

ORDERING INFORMATION

See detailed ordering and shipping information on page 8 of this data sheet.

© Semiconductor Components Industries, LLC, 2015

MAXIMUM RATINGS

Symbol	Parameter		Value	Unit
V_{CC}	DC Supply Voltage		−0.5 to +6.5	V
V_{IN}	DC Input Voltage		−0.5 to V_{CC}+0.5	V
V_{OUT}	DC Output Voltage		−0.5 to V_{CC}+0.5	V
I_{IN}	DC Input Diode Current, per Pin		±20	mA
I_{OUT}	DC Input Diode Current, Per Pin		±35	mA
I_{CC}	DC Supply Current, V_{CC} and GND Pins		±75	mA
I_{IK}	Input Clamp Current (V_{IN} < 0 or V_{IN} > V_{CC})		±20	mA
I_{OK}	Output Clamp Current (V_{OUT} < 0 or V_{OUT} > V_{CC})		±20	mA
T_{STG}	Storage Temperature Range		−65 to +150	°C
T_L	Lead Temperature, 1 mm from Case for 10 secs		260	°C
T_J	Junction Temperature Under Bias		+150	°C
θ_{JA}	Thermal Resistance (Note 1)	SOIC−20W WQFN20 QFN20 TSSOP−20	96 99 111 150	°C/W
P_D	Power Dissipation in Still Air at 25°C	SOIC−20W WQFN20 QFN20 TSSOP−20	1302 1256 1127 833	mW
MSL	Moisture Sensitivity	SOIC−20W All Other Packages	Level 3 Level 1	–
F_R	Flammability Rating	Oxygen Index: 28 to 34	UL 94 V−0 @ 0.125 in	–
V_{ESD}	ESD Withstand Voltage (Note 2)	Human Body Model Charged Device Model	> 2000 > 1000	V

Stresses exceeding those listed in the Maximum Ratings table may damage the device. If any of these limits are exceeded, device functionality should not be assumed, damage may occur and reliability may be affected.

1. Measured with minimum pad spacing on an FR4 board, using 76 mm−by−114 mm, 2−ounce copper trace no air flow per JESD51−7.
2. HBM tested to EIA / JESD22−A114−A. CDM tested to JESD22−C101−A. JEDEC recommends that ESD qualification to EIA/JESD22−A115A (Machine Model) be discontinued.
3. Tested to EIA/JESD78 Class II.

RECOMMENDED OPERATING CONDITIONS

Symbol	Parameter		Min	Max	Unit
MC74HC					
V_{CC}	DC Supply Voltage		2.0	6.0	V
V_{IN}, V_{OUT}	DC Input Voltage, Output Voltage (Note 4)		0	V_{CC}	V
T_A	Operating Free−Air Temperature		−55	+125	°C
t_r, t_f	Input Rise or Fall Time	V_{CC} = 2.0 V V_{CC} = 4.5 V V_{CC} = 6.0 V	0 0 0	1000 500 400	ns
MC74HCT					
V_{CC}	DC Supply Voltage		4.5	5.5	V
V_{IN}, V_{OUT}	DC Input Voltage, Output Voltage (Note 4)		0	V_{CC}	V
T_A	Operating Free−Air Temperature		−55	+125	°C
t_r, t_f	Input Rise or Fall Time		0	500	ns

Functional operation above the stresses listed in the Recommended Operating Ranges is not implied. Extended exposure to stresses beyond the Recommended Operating Ranges limits may affect device reliability.

4. Unused inputs must always be tied to an appropriate logic voltage level (e.g., either GND or V_{CC}). Unused outputs must be left open.

Share Feedback
Your Opinion Matters

DC ELECTRICAL CHARACTERISTICS (MC74HC273A)

Symbol	Parameter	Test Conditions	V_{CC} V	Guaranteed Limit –55 to 25°C	≤ 85°C	≤ 125°C	Unit
V_{IH}	Minimum High–Level Input Voltage	$V_{out} = V_{CC} - 0.1$ V $\|I_{out}\| \le 20$ μA	2.0 3.0 4.5 6.0	1.5 2.1 3.15 4.2	1.5 2.1 3.15 4.2	1.5 2.1 3.15 4.2	V
V_{IL}	Maximum Low–Level Input Voltage	$V_{out} = 0.1$ V $\|I_{out}\| \le 20$ μA	2.0 3.0 4.5 6.0	0.5 0.9 1.35 1.8	0.5 0.9 1.35 1.8	0.5 0.9 1.35 1.8	V
V_{OH}	Minimum High–Level Output Voltage	$V_{in} = V_{IH}$ $\|I_{out}\| \le 20$ μA	2.0 4.5 6.0	1.9 4.4 5.9	1.9 4.4 5.9	1.9 4.4 5.9	V
		$V_{in} = V_{IH}$ $\|I_{out}\| \le 2.4$ mA $\|I_{out}\| \le 6.0$ mA $\|I_{out}\| \le 7.8$ mA	3.0 4.5 6.0	2.48 3.98 5.48	2.34 3.84 5.34	2.2 3.7 5.2	
V_{OL}	Maximum Low–Level Output Voltage	$V_{in} = V_{IL}$ $\|I_{out}\| \le 20$ μA	2.0 4.5 6.0	0.1 0.1 0.1	0.1 0.1 0.1	0.1 0.1 0.1	V
		$V_{in} = V_{IL}$ $\|I_{out}\| \le 2.4$ mA $\|I_{out}\| \le 6.0$ mA $\|I_{out}\| \le 7.8$ mA	3.0 4.5 6.0	0.26 0.26 0.26	0.33 0.33 0.33	0.4 0.4 0.4	
I_{in}	Maximum Input Leakage Current	$V_{in} = V_{CC}$ or GND	6.0	±0.1	±1.0	±1.0	μA
I_{CC}	Maximum Quiescent Supply Current (per Package)	$V_{in} = V_{CC}$ or GND $I_{out} = 0$ μA	6.0	4.0	40	160	μA

Product parametric performance is indicated in the Electrical Characteristics for the listed test conditions, unless otherwise noted. Product performance may not be indicated by the Electrical Characteristics if operated under different conditions.

AC ELECTRICAL CHARACTERISTICS (MC74HC273A)

Symbol	Parameter	V_{CC} V	Guaranteed Limit –55 to 25°C	≤ 85°C	≤ 125°C	Unit
f_{max}	Maximum Clock Frequency (50% Duty Cycle) (Figures 2 and 3)	2.0 3.0 4.5 6.0	6.0 15 30 35	5.0 10 24 28	4.0 8.0 20 24	MHz
t_{PLH} t_{PHL}	Maximum Propagation Delay, Clock to Q (Figures 2 and 3)	2.0 3.0 4.5 6.0	145 90 29 25	180 120 36 31	220 140 44 38	ns
t_{PHL}	Maximum Propagation Delay, Reset to Q (Figures 2 and 3)	2.0 3.0 4.5 6.0	145 90 29 25	180 120 36 31	220 140 44 38	ns
t_{TLH} t_{THL}	Maximum Output Transition Time, Any Output (Figures 2 and 3)	2.0 3.0 4.5 6.0	75 27 15 13	95 32 19 16	110 36 22 19	ns
C_{in}	Maximum Input Capacitance		10	10	10	pF

		Typical @ 25°C, V_{CC} = 5.0 V	
C_{PD}	Power Dissipation Capacitance (Per Enabled Output)*	48	pF

Product parametric performance is indicated in the Electrical Characteristics for the listed test conditions, unless otherwise noted. Product performance may not be indicated by the Electrical Characteristics if operated under different conditions.

*Used to determine the no–load dynamic power consumption: $P_D = C_{PD} V_{CC}^2 f + I_{CC} V_{CC}$.

Share Feedback
Your Opinion Matters

TIMING REQUIREMENTS (MC74HC273A)

Symbol	Parameter	Figure	V_{CC} Volts	Guaranteed Limit –55 to 25°C Min	–55 to 25°C Max	≤ 85°C Min	≤ 85°C Max	≤ 125°C Min	≤ 125°C Max	Unit
t_{su}	Minimum Setup Time, Data to Clock	5	2.0 3.0 4.5 6.0	60 23 12 10		75 27 15 13		90 32 18 15		ns
t_h	Minimum Hold Time, Clock to Data	5	2.0 3.0 4.5 6.0	3.0 3.0 3.0 3.0		3.0 3.0 3.0 3.0		3.0 3.0 3.0 3.0		ns
t_{rec}	Minimum Recovery Time, Reset Inactive to Clock	4	2.0 3.0 4.5 6.0	5.0 5.0 5.0 5.0		5.0 5.0 5.0 5.0		5.0 5.0 5.0 5.0		ns
t_w	Minimum Pulse Width, Clock	3	2.0 3.0 4.5 6.0	60 23 12 10		75 27 15 13		90 32 18 15		ns
t_w	Minimum Pulse Width, Reset	4	2.0 3.0 4.5 6.0	60 23 12 10		75 27 15 13		90 32 18 15		ns
t_r, t_f	Maximum Input Rise and Fall Times	3	2.0 3.0 4.5 6.0		1000 800 500 400		1000 800 500 400		1000 800 500 400	ns

Share Feedback
Your Opinion Matters

DC ELECTRICAL CHARACTERISTICS (MC74HCT273A)

Symbol	Parameter	Test Conditions	V_{CC} V	Guaranteed Limit −55 to 25°C	≤ 85°C	≤ 125°C	Unit
V_{IH}	Minimum High−Level Input Voltage	V_{out} = 0.1 V or V_{CC} − 0.1 V $\|I_{out}\|$ ≤ 20 μA	4.5 5.5	2.0 2.0	2.0 2.0	2.0 2.0	V
V_{IL}	Maximum Low−Level Input Voltage	V_{out} = 0.1 V or V_{CC} − 0.1 V $\|I_{out}\|$ ≤ 20 μA	4.5 5.5	0.8 0.8	0.8 0.8	0.8 0.8	V
V_{OH}	Minimum High−Level Output Voltage	V_{in} = V_{IH} or V_{IL} $\|I_{out}\|$ ≤ 20 μA	4.5 5.5	4.4 5.4	4.4 5.4	4.4 5.4	V
		V_{in} = V_{IH} or V_{IL} $\|I_{out}\|$ ≤ 4.0 mA	4.5	3.98	3.84	3.7	
V_{OL}	Maximum Low−Level Output Voltage	V_{in} = V_{IH} or V_{IL} $\|I_{out}\|$ ≤ 20 μA	4.5 5.5	0.1 0.1	0.1 0.1	0.1 0.1	V
		V_{in} = V_{IH} or V_{IL} $\|I_{out}\|$ ≤ 4.0 mA	4.5	0.26	0.33	0.4	
I_{in}	Maximum Input Leakage Current	V_{in} = V_{CC} or GND	5.5	±0.1	±1.0	±1.0	μA
I_{CC}	Maximum Quiescent Supply Current (per Package)	V_{in} = V_{CC} or GND I_{out} = 0 μA	5.5	4.0	40	160	μA

				≥ −55°C	25°C to 125°C	
ΔI_{CC}	Additional Quiescent Supply Current	V_{in} = 2.4 V, Any One Input V_{in} = V_{CC} or GND, Other Inputs I_{out} = 0 μA	5.5	2.9	2.4	mA

Product parametric performance is indicated in the Electrical Characteristics for the listed test conditions, unless otherwise noted. Product performance may not be indicated by the Electrical Characteristics if operated under different conditions.

Share Feedback
Your Opinion Matters

AC ELECTRICAL CHARACTERISTICS (MC74HCT273A)

Symbol	Parameter	Guaranteed Limit			Unit
		–55 to 25°C	≤ 85°C	≤ 125°C	
f_{max}	Maximum Clock Frequency (50% Duty Cycle) (Figures 2 and 3)	30	24	20	MHz
t_{PLH}, t_{PHL}	Maximum Propagation Delay, Clock to Q (Figures 2 and 3)	25	28	35	ns
t_{PHL}	Maximum Propagation Delay, Reset to Q	25	28	35	ns
t_{TLH}, t_{THL}	Maximum Output Transition Time, Any Output (Figures 2 and 3)	18	20	22	ns

		Typical @ 25°C, V_{CC} = 5.0 V	
C_{PD}	Power Dissipation Capacitance (Per Gate)*	30	pF

Product parametric performance is indicated in the Electrical Characteristics for the listed test conditions, unless otherwise noted. Product performance may not be indicated by the Electrical Characteristics if operated under different conditions.
*Used to determine the no–load dynamic power consumption: $P_D = C_{PD} V_{CC}^2 f + I_{CC} V_{CC}$.

TIMING REQUIREMENTS (MC74HCT273A)

Symbol	Parameter	Fig.	Guaranteed Limit						Unit
			–55 to 25°C		≤ 85°C		≤ 125°C		
			Min	Max	Min	Max	Min	Max	
t_{su}	Minimum Setup Time, Data to Clock		10		12		15		ns
t_h	Minimum Hold Time, Clock to Data		3.0		3.0		3.0		ns
t_{rec}	Minimum Recovery Time, Set or Reset Inactive to Clock		5.0		5.0		5.0		ns
t_w	Minimum Pulse Width, Clock	4	12		15		18		ns
t_w	Minimum Pulse Width, Set or Reset		12		15		18		ns
t_r, t_f	Maximum Input Rise and Fall Times	3		500		500		500	ns

Share Feedback
Your Opinion Matters

SWITCHING WAVEFORMS

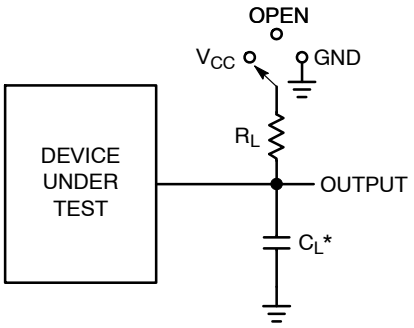

*C_L Includes probe and jig capacitance

Test	Switch Position	C_L	R_L
t_{PLH} / t_{PHL}	Open	50 pF	1 kΩ
t_{PLZ} / t_{PZL}	V_{CC}		
t_{PHZ} / t_{PZH}	GND		

Figure 2. Test Circuit

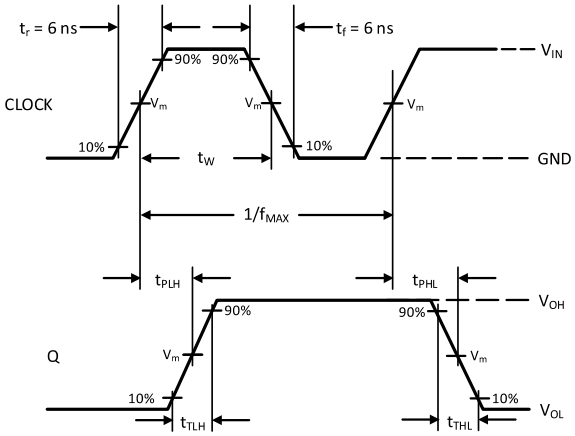

Figure 3.

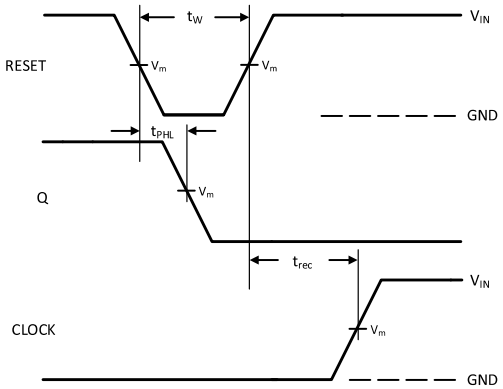

Figure 4.

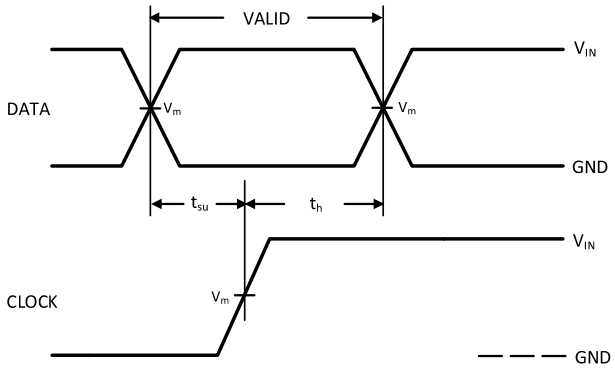

Figure 5.

Device	V_{IN}, V	V_m, V
MC74HC273A	V_{CC}	50% x V_{CC}
MC74HCT273A	3 V	1.3 V

Share Feedback
Your Opinion Matters

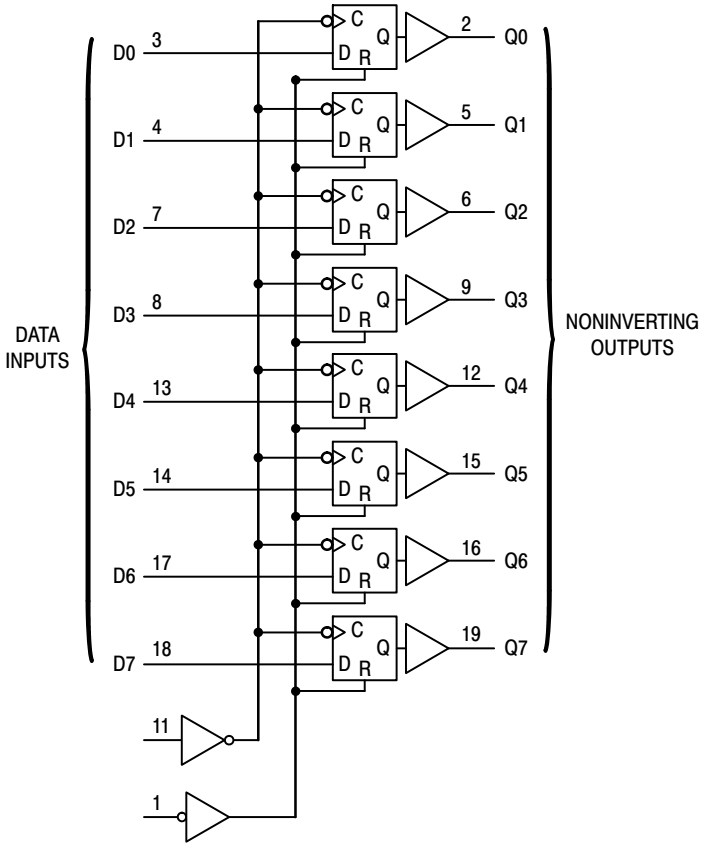

Figure 6. Expanded Logic Diagram

ORDERING INFORMATION

Device	Marking	Package	Shipping†
MC74HC273ADWG	HC273A	SOIC−20 Wide	38 Units / Rail
MC74HC273ADWR2G	HC273A	SOIC−20 Wide	1000 / Tape & Reel
MC74HC273ADWR2G−Q*	HC273A	SOIC−20 Wide	1000 / Tape & Reel
MC74HC273ADTG	HC 273A	TSSOP−20	75 Units / Rail
MC74HC273ADTR2G	HC 273A	TSSOP−20	2500 / Tape & Reel
MC74HC273ADTR2G−Q*	HC 273A	TSSOP−20	2500 / Tape & Reel
MC74HCT273ADWG	HCT273A	SOIC−20 Wide	38 Units / Rail
MC74HCT273ADWR2G	HCT273A	SOIC−20 Wide	1000 / Tape & Reel
MC74HCT273ADWR2G−Q*	HCT273A	SOIC−20 Wide	1000 / Tape & Reel
MC74HCT273ADTR2G	HCT 273A	TSSOP−20	2500 / Tape & Reel

†For information on tape and reel specifications, including part orientation and tape sizes, please refer to our Tape and Reel Packaging Specifications Brochure, BRD8011/D.

*−Q Suffix for Automotive and Other Applications Requiring Unique Site and Control Change Requirements; AEC−Q100 Qualified and PPAP Capable.

Share Feedback
Your Opinion Matters

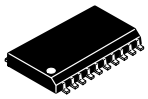

SCALE 1:1

SOIC−20 WB
CASE 751D−05
ISSUE H

DATE 22 APR 2015

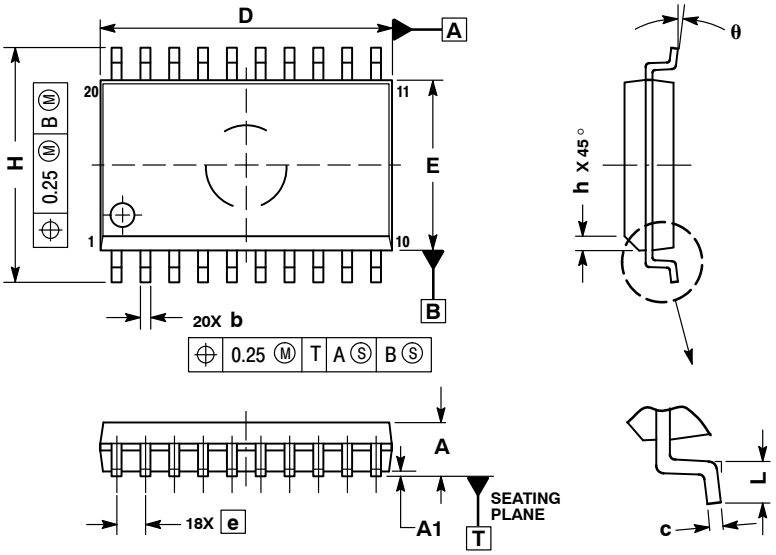

NOTES:
1. DIMENSIONS ARE IN MILLIMETERS.
2. INTERPRET DIMENSIONS AND TOLERANCES PER ASME Y14.5M, 1994.
3. DIMENSIONS D AND E DO NOT INCLUDE MOLD PROTRUSION.
4. MAXIMUM MOLD PROTRUSION 0.15 PER SIDE.
5. DIMENSION B DOES NOT INCLUDE DAMBAR PROTRUSION. ALLOWABLE PROTRUSION SHALL BE 0.13 TOTAL IN EXCESS OF B DIMENSION AT MAXIMUM MATERIAL CONDITION.

	MILLIMETERS	
DIM	MIN	MAX
A	2.35	2.65
A1	0.10	0.25
b	0.35	0.49
c	0.23	0.32
D	12.65	12.95
E	7.40	7.60
e	1.27 BSC	
H	10.05	10.55
h	0.25	0.75
L	0.50	0.90
θ	0°	7°

RECOMMENDED SOLDERING FOOTPRINT*

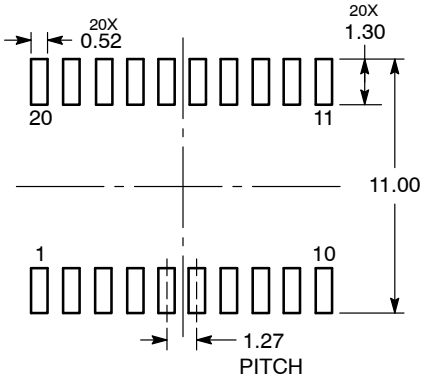

DIMENSIONS: MILLIMETERS

*For additional information on our Pb−Free strategy and soldering details, please download the **onsemi** Soldering and Mounting Techniques Reference Manual, SOLDERRM/D.

GENERIC MARKING DIAGRAM*

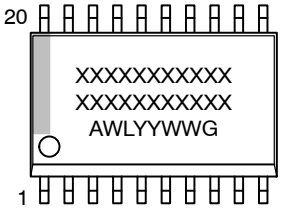

XXXXX = Specific Device Code
A = Assembly Location
WL = Wafer Lot
YY = Year
WW = Work Week
G = Pb−Free Package

*This information is generic. Please refer to device data sheet for actual part marking. Pb−Free indicator, "G" or microdot "▪", may or may not be present. Some products may not follow the Generic Marking.

DOCUMENT NUMBER:	98ASB42343B	Electronic versions are uncontrolled except when accessed directly from the Document Repository. Printed versions are uncontrolled except when stamped "CONTROLLED COPY" in red.
DESCRIPTION:	SOIC−20 WB	PAGE 1 OF 1

onsemi and onsemi are trademarks of Semiconductor Components Industries, LLC dba **onsemi** or its subsidiaries in the United States and/or other countries. **onsemi** reserves the right to make changes without further notice to any products herein. **onsemi** makes no warranty, representation or guarantee regarding the suitability of its products for any particular purpose, nor does **onsemi** assume any liability arising out of the application or use of any product or circuit, and specifically disclaims any and all liability, including without limitation special, consequential or incidental damages. **onsemi** does not convey any license under its patent rights nor the rights of others.

onsemi, onsemi, and other names, marks, and brands are registered and/or common law trademarks of Semiconductor Components Industries, LLC dba "**onsemi**" or its affiliates and/or subsidiaries in the United States and/or other countries. **onsemi** owns the rights to a number of patents, trademarks, copyrights, trade secrets, and other intellectual property. A listing of **onsemi**'s product/patent coverage may be accessed at www.onsemi.com/site/pdf/Patent−Marking.pdf. **onsemi** reserves the right to make changes at any time to any products or information herein, without notice. The information herein is provided "as−is" and **onsemi** makes no warranty, representation or guarantee regarding the accuracy of the information, product features, availability, functionality, or suitability of its products for any particular purpose, nor does **onsemi** assume any liability arising out of the application or use of any product or circuit, and specifically disclaims any and all liability, including without limitation special, consequential or incidental damages. Buyer is responsible for its products and applications using **onsemi** products, including compliance with all laws, regulations and safety requirements or standards, regardless of any support or applications information provided by **onsemi**. "Typical" parameters which may be provided in **onsemi** data sheets and/or specifications can and do vary in different applications and actual performance may vary over time. All operating parameters, including "Typicals" must be validated for each customer application by customer's technical experts. **onsemi** does not convey any license under any of its intellectual property rights nor the rights of others. **onsemi** products are not designed, intended, or authorized for use as a critical component in life support systems or any FDA Class 3 medical devices or medical devices with a same or similar classification in a foreign jurisdiction or any devices intended for implantation in the human body. Should Buyer purchase or use **onsemi** products for any such unintended or unauthorized application, Buyer shall indemnify and hold **onsemi** and its officers, employees, subsidiaries, affiliates, and distributors harmless against all claims, costs, damages, and expenses, and reasonable attorney fees arising out of, directly or indirectly, any claim of personal injury or death associated with such unintended or unauthorized use, even if such claim alleges that **onsemi** was negligent regarding the design or manufacture of the part. **onsemi** is an Equal Opportunity/Affirmative Action Employer. This literature is subject to all applicable copyright laws and is not for resale in any manner.

ADDITIONAL INFORMATION

TECHNICAL PUBLICATIONS:
Technical Library: www.onsemi.com/design/resources/technical−documentation
onsemi Website: www.onsemi.com

ONLINE SUPPORT: www.onsemi.com/support
For additional information, please contact your local Sales Representative at
www.onsemi.com/support/sales